MADELI

Functional Elegance

Model Number

CB-6130-110-WH

CB-6130-130-WH

Ceramic Above Counter Bathroom Lavatory

Specification & Installation Guide

FEATURES

- Design: Rectangular / Contemporary
- Material: Vitreous China in white
- Type: Above Counter
- Overflow: Yes
- Overall Size: 30" (750mm)L x 18-1/4" (463mm)W x 4-1/2"(115mm)H
- Basin inside size: 24" (606mm)L x 12-1/2"(318mm) W x 4-1/8"(105mm) H
- Drain Ø: 1-3/4" (45 mm)
- Faucet hole Ø: 1-3/8" (35mm) - Available in single-hole or 8" (203mm) centers
    - Single: CB-6130-110-WH
    - 8" center: CB-6130-130-WH
- Cutout for installation on flat countertop: 17-3/4"(400mm) x 26"(660mm)
- Use lavatory to locate cut-out position
- Basin Clamp Assembly: Not applicable.
- Packaging Dimensions: 32" (813mm) x 20"(508mm) x 8" (203mm)
- Weight: 62 lbs. / 28 kgs.

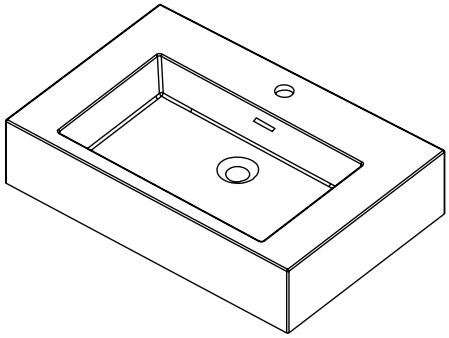

FINISHES

White (WH)

COMPLIANCE

CSA B45.5-11/IAPMO Z124-11

ADA Compliance when installed per ADA requirement.

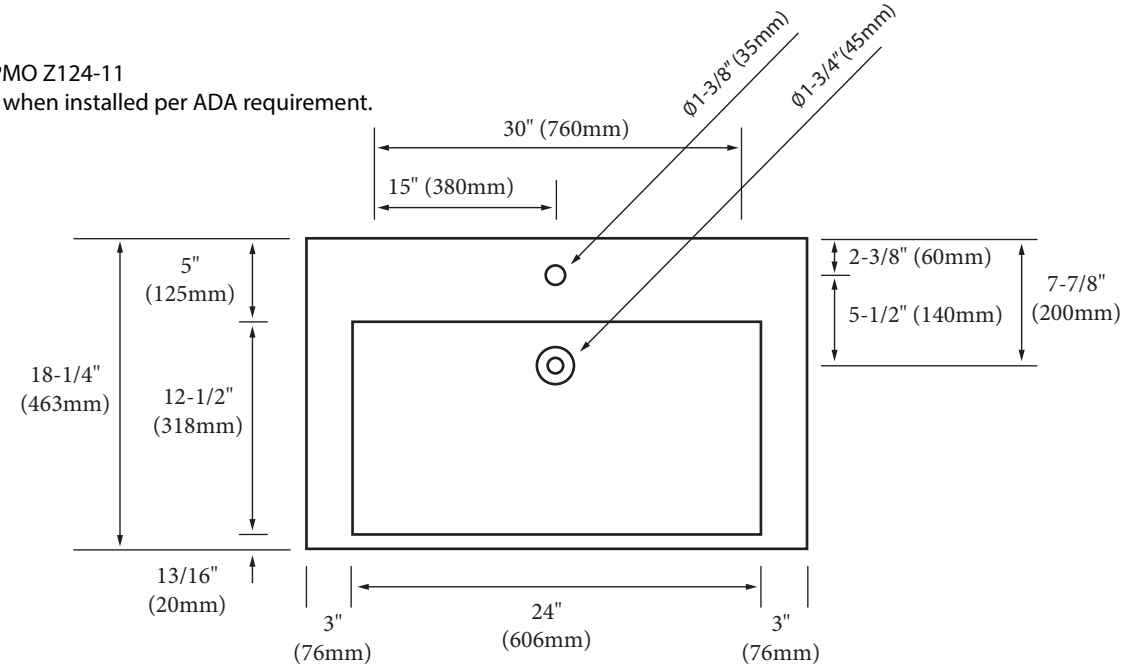

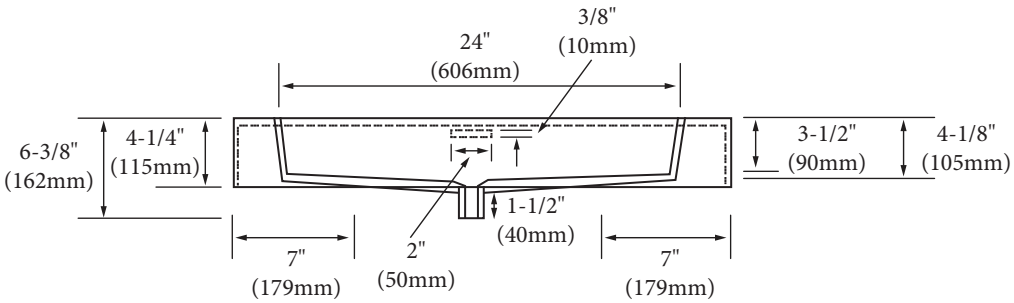

For clarification, please contact Madeli Customer Care at (800)-819-6988 or (305)-718-8817 Ext. 1

All dimensions are approximate and subject to standard tolerance. Specifications subject to change without prior notice.

Madeli, USA LLC | 9710 NW 110th Ave., Suite 1 | Miami , FL 33178 | madeli.com
Tel: 305-718-8817 | Fax: 305-718-8477 | Toll Free: 1-800-819-6988

Rev. 120116

All Rights Reserved - 2016